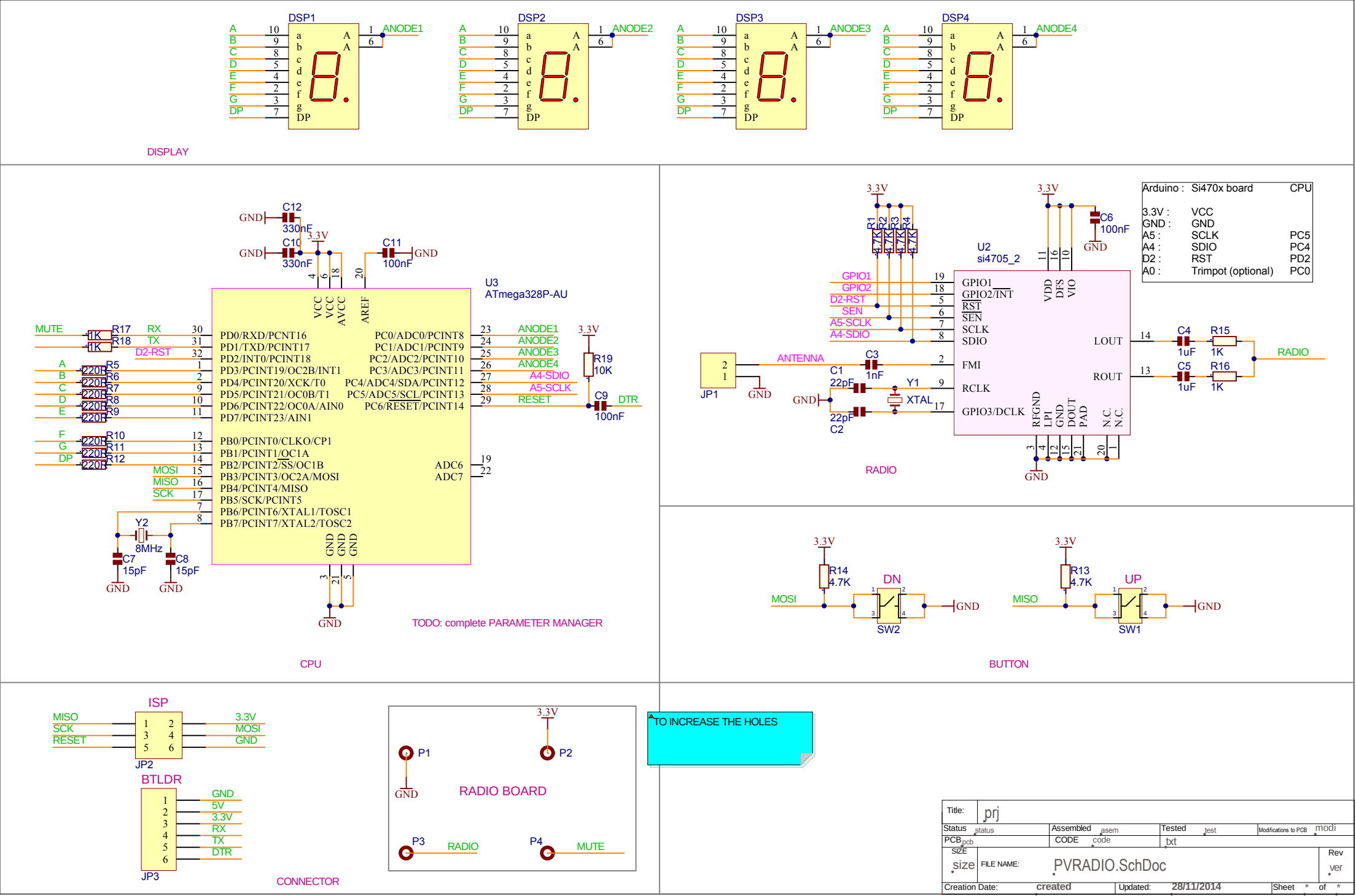
DSP1
DSP2
DSP3
DSP4
ANODE1
ANODE2
ANODE3
ANODE4
DISPLAY
C12 330nF
C10 330nF
C11 100nF
U3
ATmega328P-AU
MUTE
R17 1K
R18 1K
R5 220R
R6 220R
R7 220R
R8 220R
R9 220R
R10 220R
R11 220R
R12 220R
RX
TX
D2-RST
MOSI
MISO
SCK
PD0/RXD/PCNT16
PD1/TXD/PCNT17
PD2/INT0/PCINT18
PD3/PCINT19/OC2B/INT1
PD4/PCINT20/XCK/T0
PD5/PCINT21/OC0B/T1
PD6/PCINT22/OC0A/AIN0
PD7/PCINT23/AIN1
PB0/PCINT0/CLKO/CP1
PB1/PCINT1/OC1A
PB2/PCINT2/SS/OC1B
PB3/PCINT3/OC2A/MOSI
PB4/PCINT4/MISO
PB5/SCK/PCINT5
PB6/PCINT6/XTAL1/TOSC1
PB7/PCINT7/XTAL2/TOSC2
PC0/ADC0/PCINT8
PC1/ADC1/PCINT9
PC2/ADC2/PCINT10
PC3/ADC3/PCINT11
PC4/ADC4/SDA/PCINT12
PC5/ADC5/SCL/PCINT13
PC6/RESET/PCINT14
ADC6
ADC7
ANODE1
ANODE2
ANODE3
ANODE4
A4-SDIO
A5-SCLK
RESET
R19 10K
C9 100nF
DTR
Y2 8MHz
C7 15pF
C8 15pF
TODO: complete PARAMETER MANAGER
CPU
U2
si4705_2
GPIO1
GPIO2
D2-RST
SEN
A5-SCLK
A4-SDIO
ANTENNA
JP1
C1 22pF
C3 1nF
Y1 XTAL
C2 22pF
FMI
RCLK
GPIO3/DCLK
LOUT
ROUT
C4 1uF
C5 1uF
R15 1K
R16 1K
RADIO
C6 100nF
Arduino : Si470x board CPU
3.3V : VCC
GND : GND
A5 : SCLK PC5
A4 : SDIO PC4
D2 : RST PD2
A0 : Trimpot (optional) PC0
R14 4.7K
DN
SW2
R13 4.7K
UP
SW1
ISP
JP2
BTLDR
JP3
CONNECTOR
RADIO BOARD
P1
P2
P3
P4
TO INCREASE THE HOLES
Title: prj
Status status
Assembled asem
Tested test
Modifications to PCB modi
PCB pcb
CODE code
txt
SIZE size
FILE NAME: PVRADIO.SchDoc
Rev ver
Creation Date: created
Updated: 28/11/2014
Sheet * of *